REVISION				
REV.	ZONE	DESCRIPTION	DATE	DRAWNBY
A		INITIAL RELEASE	7/23/2025	L. BADONG

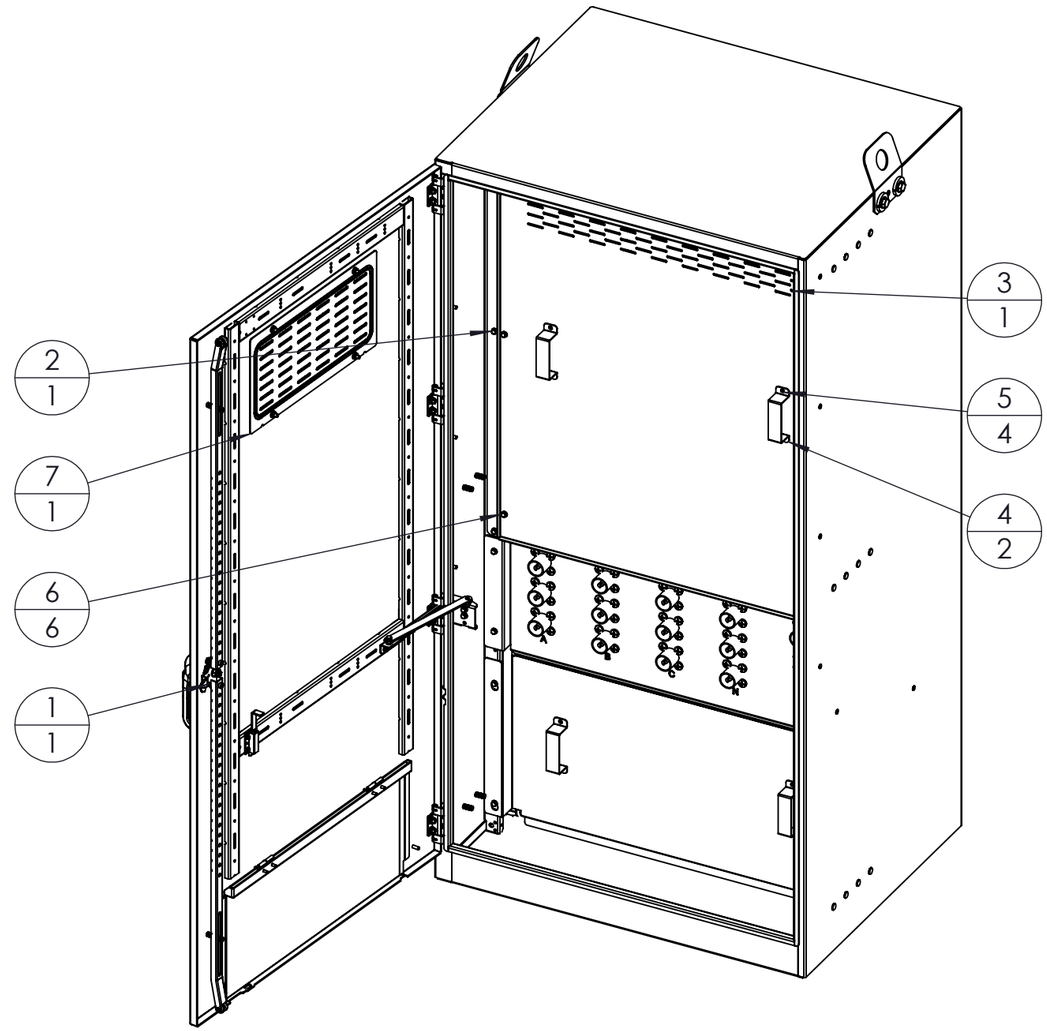

BILL OF MATERIAL

ITEM NO.	PART NUMBER	DESCRIPTION	QTY.
1	100-30988	ASSEMBLY, ENCLOSURE - WM-723630-ALU-N3R	1
2	100-90004	ASSEMBLY, C1 INTERNAL FRAME MOUNT, 750MCM, 400A FUSES	1
3	250-40239	DEADFRONT, TOP, 72x36x30	1
4	250-00024	HANDLE, DEADFRONT	2
5	ROB-R532X0706-ZN	RIVET, OPEN END BLIND - 5/32 X 0.188-0.250 GRIP RANGE - ZN	4
6	STF-0420X0375-ZN	SCREW, THREAD FORMING - 1/4-20 UNC X 0.375 - 5 ZN	6
7	250-00091	PLATE, DEFLECTOR, L	1

MATERIAL 157877.51 lbs

FINISH
BARE

PROPRIETARY AND CONFIDENTIAL

THE INFORMATION CONTAINED IN THIS DRAWING IS THE SOLE PROPERTY OF FOXFAB POWER SOLUTIONS ANY REPRODUCTION IN PART OR AS A WHOLE WITHOUT THE WRITTEN PERMISSION OF FOXFAB POWER SOLUTIONS IS PROHIBITED.

DRAWN BY LB | SAVED ON 7/23/2025
BD - | TOP DIE - | BOTTOM DIE -

UNLESS OTHERWISE SPECIFIED:
DIMENSIONS ARE IN INCHES
TOLERANCES:
X ± .25
X.X ± .1
X.XX ± .05
X.XXX ± .025
ANGULAR ± 1
INTERPRET DIM AND TOL. PER:
ASME Y14.5

Foxfab
Power Solutions
2579-188 ST.
SURREY, BC V3Z 2A1
(604) 460 - 9310
WWW.FOXFAB.COM

TITLE:
FFCC-C1-1200-C5-G-ALU-LZ-FUS(400A)

THIRD ANGLE: | SIZE **B** | SCALE 1:50 | REV A

ITEM NO. | DWG. NO. 003-90002 | SHEET 1 OF 2

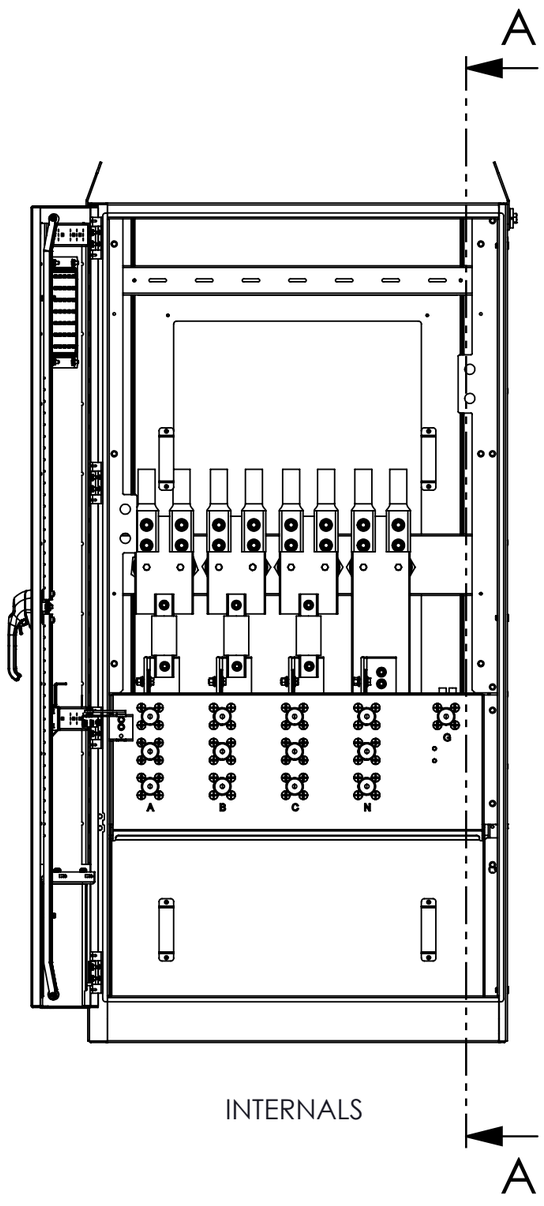

INTERNALS

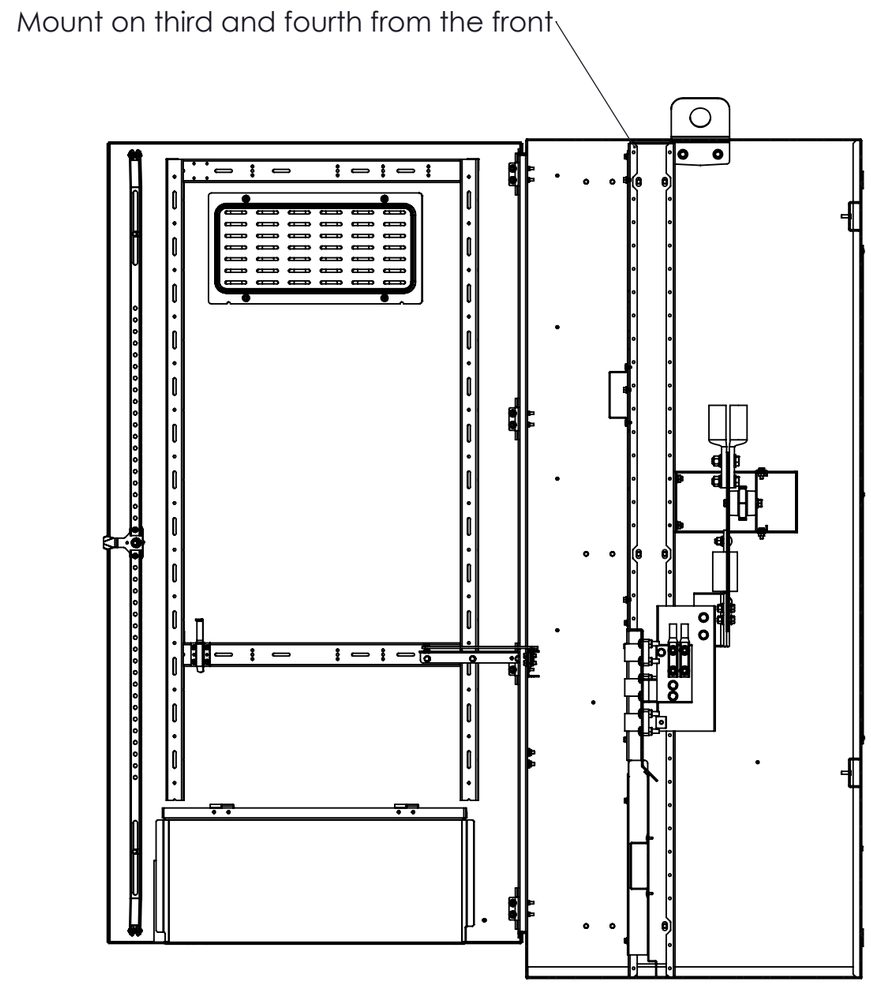

SECTION A-A

SCALE 1 : 13

MATERIAL 157877.51 lbs	DRAWN BY LB	SAVED ON 7/23/2025	Foxfab Power Solutions — 2579-188 ST. SURREY, BC V3Z 2A1 (604) 460 - 9310 WWW.FOXFAB.COM
FINISH BARE	BD - / TOP DIE - / BOTTOM DIE -		TITLE: FFCC-C1-1200-C5-G-ALU-LZ-FUS(400A)
PROPRIETARY AND CONFIDENTIAL THE INFORMATION CONTAINED IN THIS DRAWING IS THE SOLE PROPERTY OF FOXFAB POWER SOLUTIONS ANY REPRODUCTION IN PART OR AS A WHOLE WITHOUT THE WRITTEN PERMISSION OF FOXFAB POWER SOLUTIONS IS PROHIBITED.	UNLESS OTHERWISE SPECIFIED: DIMENSIONS ARE IN INCHES TOLERANCES: X ± .25, X.X ± .1, X.XX ± .05, X.XXX ± .025, ANGULAR ±1, INTERPRET DIM AND TOL. PER: **ASME Y14.5**		THIRD ANGLE: SIZE **B** SCALE 1:50 REV A
			ITEM NO. DWG. NO. 003-90002 SHEET 2 OF 2

REVISION				
REV.	ZONE	DESCRIPTION	DATE	DRAWNBY
A		INITIAL RELEASE	7/23/2025	L. BADONG

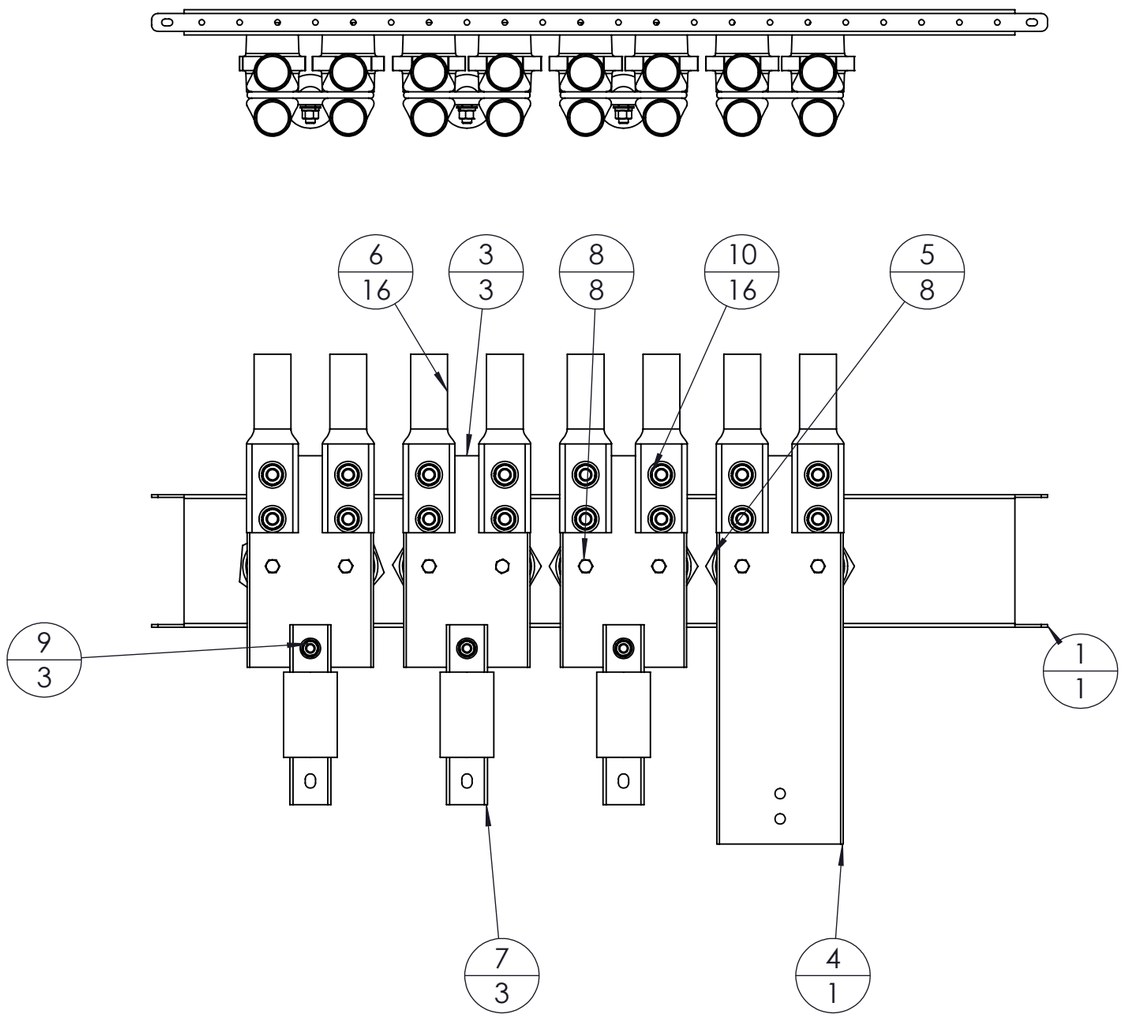

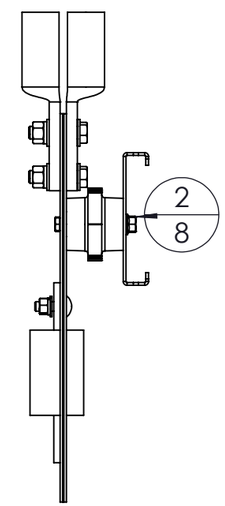

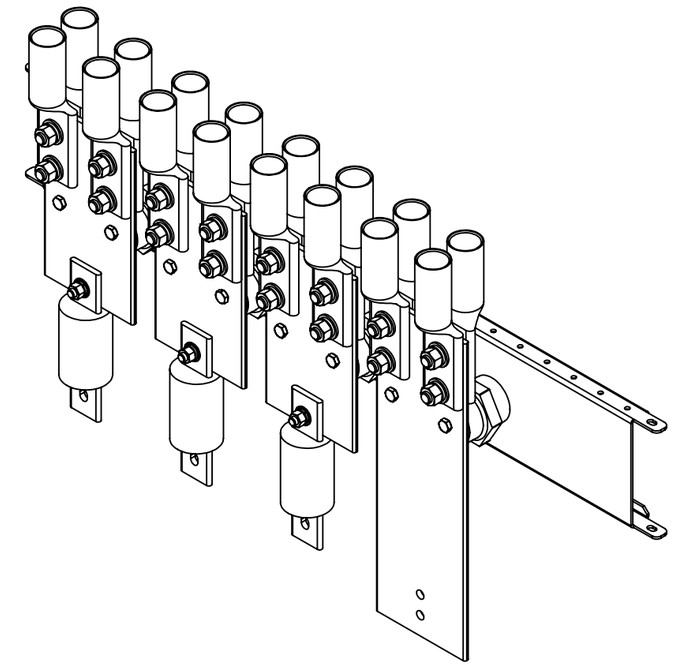

BILL OF MATERIAL

ITEM NO.	PART NUMBER	DESCRIPTION	QTY.
1	250-90003	FRAME, MOUNTING, HORIZONTAL, BUS/STANDOFF MOUNT, 2INSU/PH	1
2	BS-0616X1000-ZN	BOLT, SERRATED - 3/8-16 UNC X 1 - 5 ZN	8
3	240-90008	BUS, 1600A FUSE MOUNT	3
4	240-90013	BUS, 1600A FUSE MOUNT	1
5	559687	2-1/4" X 3/8"-16 THREAD, INSULATED STANDOFF	8
6	ALND-750-12-134 COMP LUG		16
7	Mersen_A4J400	400a, type-j power fuse, 65ka	3
8	BH-0518X1250-ZN	BOLT, HEX - 5/16-18 UNC X 1.25 - 5 ZN	8
9	890-0616E-1.25L	ASSEM, 3/8-16 UNC ZN X 1.25" BC - WF, WP, NH	3
10	890-0813D-2.0L	ASSEM, 1/2-11 UNC ZN X 2.25" BH,WF,WP, WF, NH	16

MATERIAL 20700.60 lbs

FINISH
BARE

PROPRIETARY AND CONFIDENTIAL

THE INFORMATION CONTAINED IN THIS DRAWING IS THE SOLE PROPERTY OF FOXFAB POWER SOLUTIONS ANY REPRODUCTION IN PART OR AS A WHOLE WITHOUT THE WRITTEN PERMISSION OF FOXFAB POWER SOLUTIONS IS PROHIBITED.

DRAWN BY LB | SAVED ON 7/23/2025
BD - | TOP DIE - | BOTTOM DIE -

UNLESS OTHERWISE SPECIFIED:
DIMENSIONS ARE IN INCHES
TOLERANCES:
X ± .25
X.X ± .1
X.XX ± .05
X.XXX ± .025
ANGULAR ± 1
INTERPRET DIM AND TOL. PER:
ASME Y14.5

Foxfab Power Solutions
2579-188 ST.
SURREY, BC V3Z 2A1
(604) 460 - 9310
WWW.FOXFAB.COM

TITLE:
ASSEMBLY, SUPPORT BRACKET, BUS MOUNT

THIRD ANGLE: | SIZE **B** | SCALE 1:5 | REV A

ITEM NO. | DWG. NO. 100-90003 | SHEET 1 OF 1

REVISION				
REV.	ZONE	DESCRIPTION	DATE	DRAWNBY
A		INITIAL RELEASE	7/23/2025	L. BADONG

DETAIL A

SCALE 1 : 6

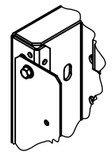

MOUNT ON THE 1ST HOLE FROM THE TOP

DETAIL B

SCALE 1 : 6

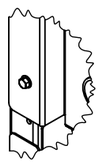

MOUNT ON THE 21ST HOLE FROM THE BOTTOM

DETAIL C

SCALE 1 : 6

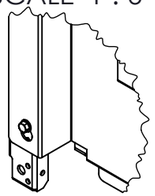

MOUNT ON THE 1ST HOLE FROM THE BOTTOM

DETAIL D

SCALE 1 : 6

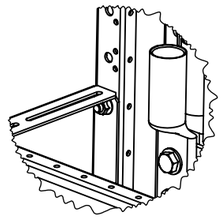

MOUNT ON 15TH HOLE FROM TOP

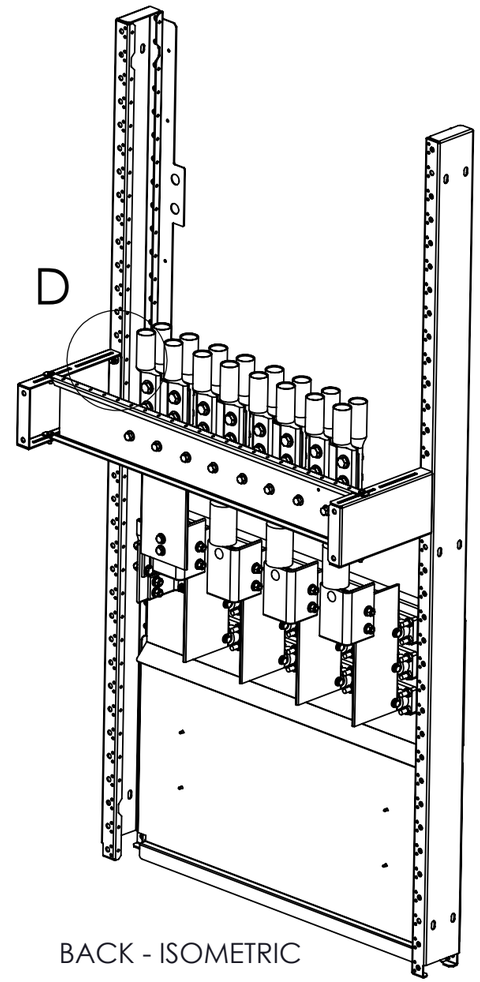

BACK - ISOMETRIC

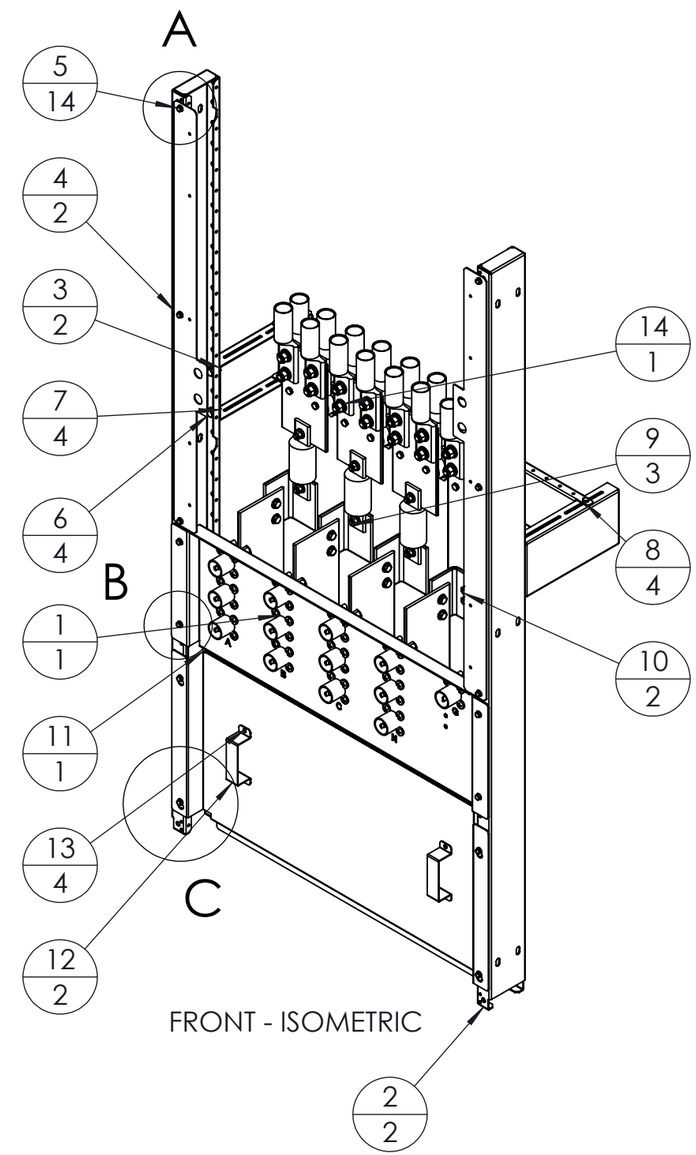

FRONT - ISOMETRIC

BILL OF MATERIAL

ITEM NO.	PART NUMBER	DESCRIPTION	QTY.
1	100-90005	ASSEMBLY, CAMPLATE, NEUTRAL, 1200A FUSE ADAPTERS, 72x36 ENC	1
2	250-20120	FRAME, VERTICAL, WALL MOUNT, 70.0"H X 5.0"	2
3	250-20156	BRACE, SUPPORT, UNISTRUT, 5.25"W	2
4	250-40240	FRAME, DEADFRONT MOUNT, 41" LENGTH	2
5	STF-0420X0375-ZN	SCREW, THREAD FORMING - 1/4-20 UNC X 0.375 - 5 ZN	14
6	BS-0616X0750-ZN	BOLT, SERRATED - 3/8-16 UNC X 0.75 - 5 ZN	4
7	NS-0616-ZN	NUT, SERRATED - 3/8-16 UNC - 5 ZN	4
8	950-40014	SUB-ASSEMBLY, 1/4 HARDWARE, 0.75"L, WF, HN	4
9	890-0616E-1.25L	ASSEM, 3/8-16 UNC ZN X 1.25" BC - WF, WP, NH	3
10	890-0616D-1.25L	ASSEM, 3/8-16 UNC ZN X 1.25" BH - WF, WF, WP, NH	2
11	250-40241	DEADFRONT, BOTTOM, 72x36x30	1
12	250-00024	HANDLE, DEADFRONT	2
13	ROB-R532X0706-ZN	RIVET, OPEN END BLIND - 5/32 X 0.188-0.250 GRIP RANGE - ZN	4
14	100-90003	ASSEMBLY, SUPPORT BRACKET, BUS MOUNT	1

MATERIAL 64906.25 lbs

FINISH
BARE

PROPRIETARY AND CONFIDENTIAL

THE INFORMATION CONTAINED IN THIS DRAWING IS THE SOLE PROPERTY OF FOXFAB POWER SOLUTIONS ANY REPRODUCTION IN PART OR AS A WHOLE WITHOUT THE WRITTEN PERMISSION OF FOXFAB POWER SOLUTIONS IS PROHIBITED.

DRAWN BY LB | SAVED ON 7/23/2025
BD - | TOP DIE - | BOTTOM DIE -

UNLESS OTHERWISE SPECIFIED:
DIMENSIONS ARE IN INCHES
TOLERANCES:
X ± .25
X.X ± .1
X.XX ± .05
X.XXX ± .025
ANGULAR ± 1
INTERPRET DIM AND TOL. PER:
ASME Y14.5

Foxfab Power Solutions
2579-188 ST.
SURREY, BC V3Z 2A1
(604) 460 - 9310
WWW.FOXFAB.COM

TITLE:
INTERNALS
ASSEMBLY, C1 INTERNAL FRAME MOUNT, 750MCM, 400A FUSES

THIRD ANGLE: | SIZE B | SCALE 1:20 | REV A

ITEM NO. | DWG. NO. 100-90004 | SHEET 1 OF 1

REVISION				
REV.	ZONE	DESCRIPTION	DATE	DRAWNBY
A		INITIAL RELEASE	7/22/2025	L. BADONG

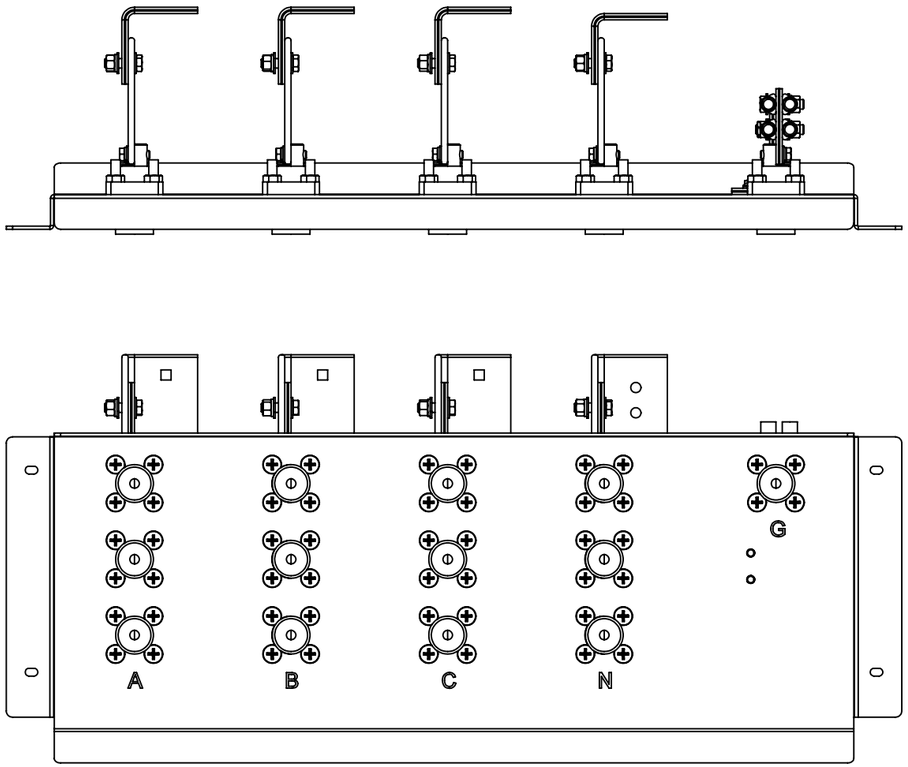

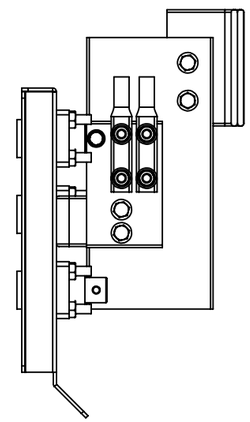

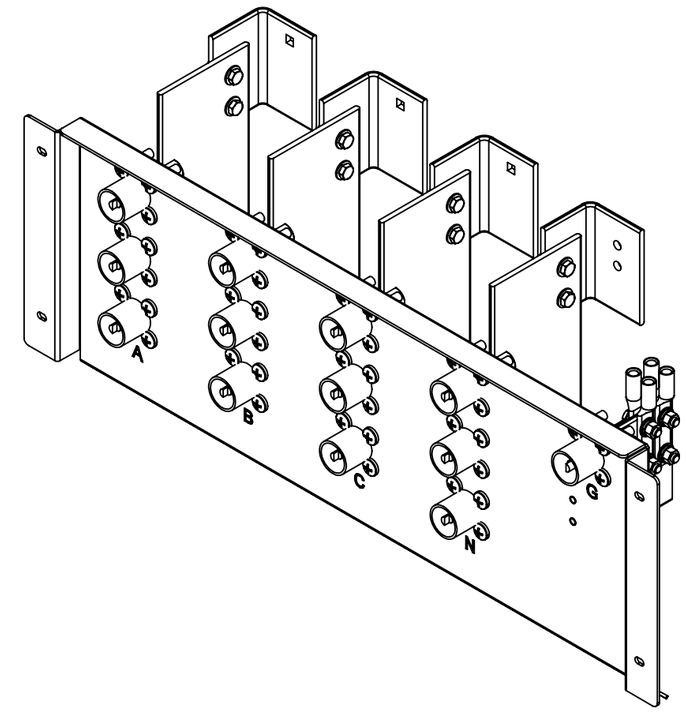

BILL OF MATERIAL

ITEM NO.	PART NUMBER	DESCRIPTION	QTY.
1	200-90002	CAMPLATE, LB, 1200A, 72x36x30 ENCL	1
2	E1016-1704B	Insulated Receptacle Single Pole Single Hole Busbar, Green Male	1
3	E1016-1727B	Insulated Receptacle Single Pole Single Hole Busbar, Red Female	6
4	E1016-1725B	Insulated Receptacle Single Pole Single Hole Busbar, Black Female	3
5	E1016-1731B	Insulated Receptacle Single Pole Single Hole Busbar, Blue Female	3
6	pan cross head_ai		52
7	machine screw nut hex_ai		52
8	240-90010	BUS, CAMLOCK ADAPTER, 1200A FUSE MOD	4
9	240-90015	BUS BAR, CAMPLATE, UPTO 1200A, GROUND COMMON	1
10	240-90009	BUS, L-SHAPE, 1200A FUSE CONNECTOR MOUNT	3
11	950-40009	SUB-ASSEMBLY, 5/16 HARDWARE, 1"L, W/OUT NUT	13
12	950-40004	SUB-ASSEMBLY, 3/8 HARDWARE, 1.25"L	8
13	240-90014	BUS, L-SHAPE, 1200A FUSE CONNECTOR MOUNT, NEUTRAL	1
14	ALND-1.0-12-134 COMP LUG		4
15	890-0616D-1.5L	ASSEM, 3/8-16 UNC ZN X 1.75" BOLT - WF, WF, WP, NH	4
16	240-90012	BUS BAR, CAMPLATE, UPTO 1200A, GROUND COMMON	1
17	890-0420G	ASSEM, 1/4-20 UNC ZN, NS, WF	2
18	890-0616D-1.25L	ASSEM, 3/8-16 UNC ZN X 1.25" BH - WF, WF, WP, NH	2

MATERIAL 17255.28 lbs

FINISH
BARE

PROPRIETARY AND CONFIDENTIAL

THE INFORMATION CONTAINED IN THIS DRAWING IS THE SOLE PROPERTY OF FOXFAB POWER SOLUTIONS ANY REPRODUCTION IN PART OR AS A WHOLE WITHOUT THE WRITTEN PERMISSION OF FOXFAB POWER SOLUTIONS IS PROHIBITED.

DRAWN BY: LB
SAVED ON: 7/22/2025
BD: -
TOP DIE: -
BOTTOM DIE: -

UNLESS OTHERWISE SPECIFIED:
DIMENSIONS ARE IN INCHES
TOLERANCES:
X ± .25
X.X ± .1
X.XX ± .05
X.XXX ± .025
ANGULAR ± 1
INTERPRET DIM AND TOL. PER:
ASME Y14.5

Foxfab Power Solutions
2579-188 ST.
SURREY, BC V3Z 2A1
(604) 460 - 9310
WWW.FOXFAB.COM

TITLE:
ASSEMBLY, CAMPLATE, NEUTRAL, 1200A FUSE ADAPTERS, 72x36 ENC

THIRD ANGLE: SIZE **B** SCALE 1:5 REV A

ITEM NO. DWG. NO. 100-90005 SHEET 1 OF 3

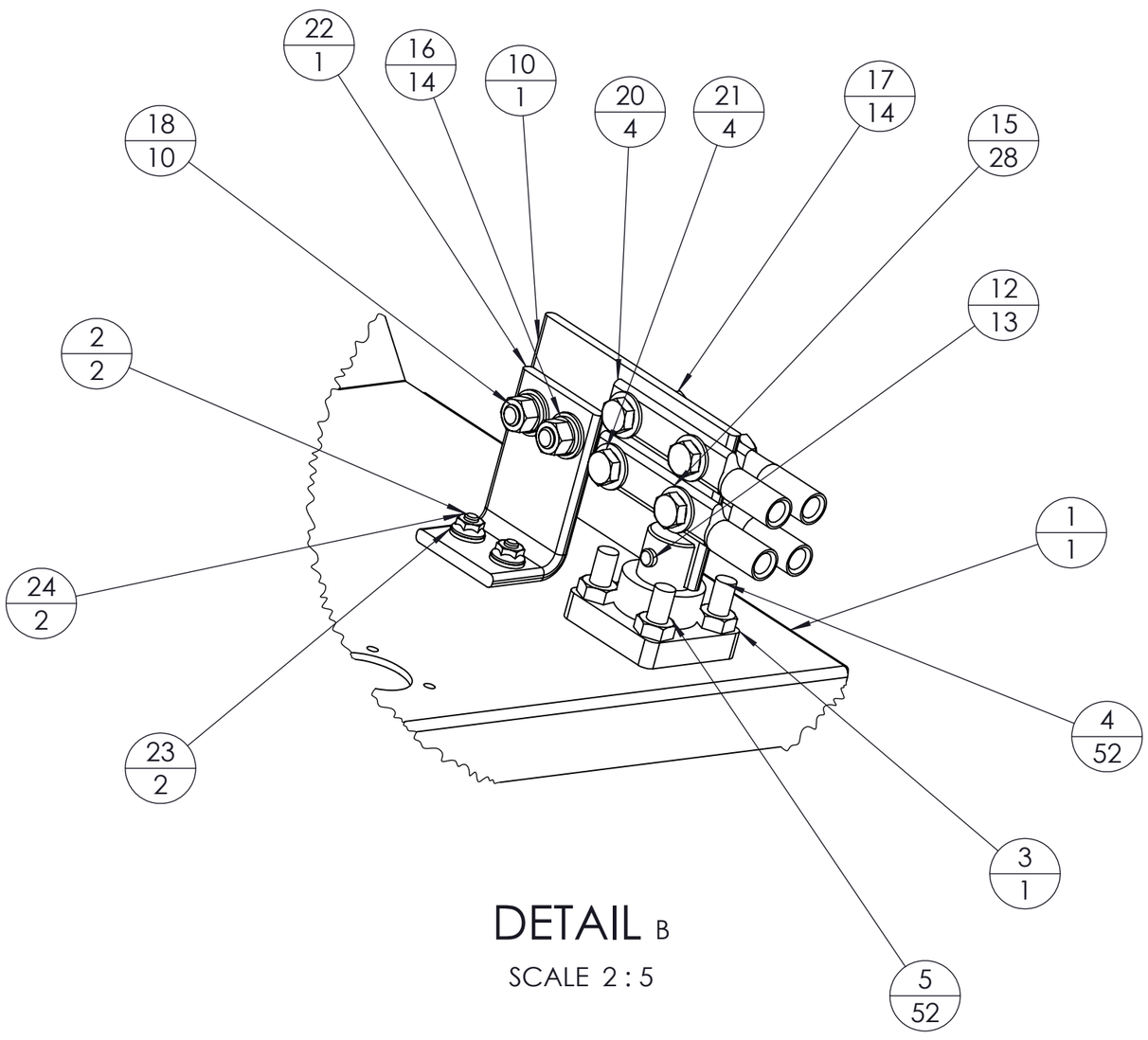

DETAIL B

SCALE 2 : 5

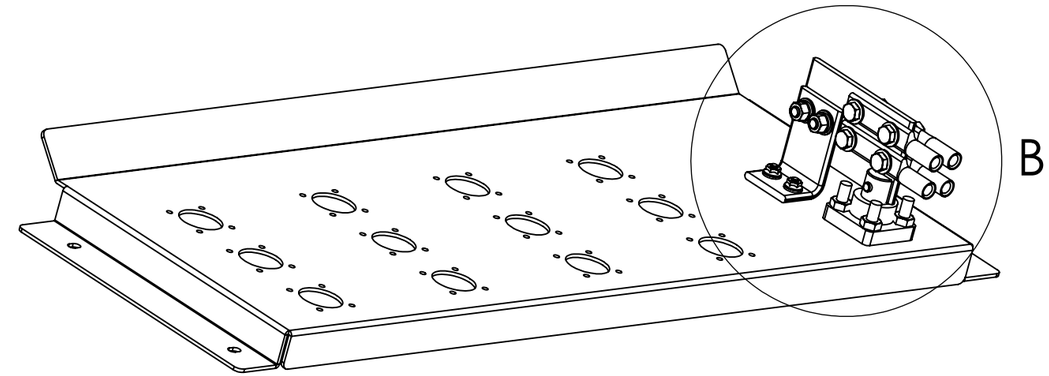

MATERIAL 17255.28 lbs	DRAWN BY LB	SAVED ON 7/22/2025	Foxfab Power Solutions — 2579-188 ST. SURREY, BC V3Z 2A1 (604) 460 - 9310 WWW.FOXFAB.COM
FINISH BARE	BD - / TOP DIE - / BOTTOM DIE -		TITLE: ASSEMBLY, CAMPLATE, NEUTRAL, 1200A FUSE ADAPTERS, 72x36 ENC
PROPRIETARY AND CONFIDENTIAL THE INFORMATION CONTAINED IN THIS DRAWING IS THE SOLE PROPERTY OF FOXFAB POWER SOLUTIONS ANY REPRODUCTION IN PART OR AS A WHOLE WITHOUT THE WRITTEN PERMISSION OF FOXFAB POWER SOLUTIONS IS PROHIBITED.	UNLESS OTHERWISE SPECIFIED: DIMENSIONS ARE IN INCHES TOLERANCES: X ± .25, X.X ± .1, X.XX ± .05, X.XXX ± .025, ANGULAR ± 1 INTERPRET DIM AND TOL. PER: **ASME Y14.5**		THIRD ANGLE: SIZE **B** SCALE 1:5 REV A
			ITEM NO. DWG. NO. 100-90005 SHEET 2 OF 3

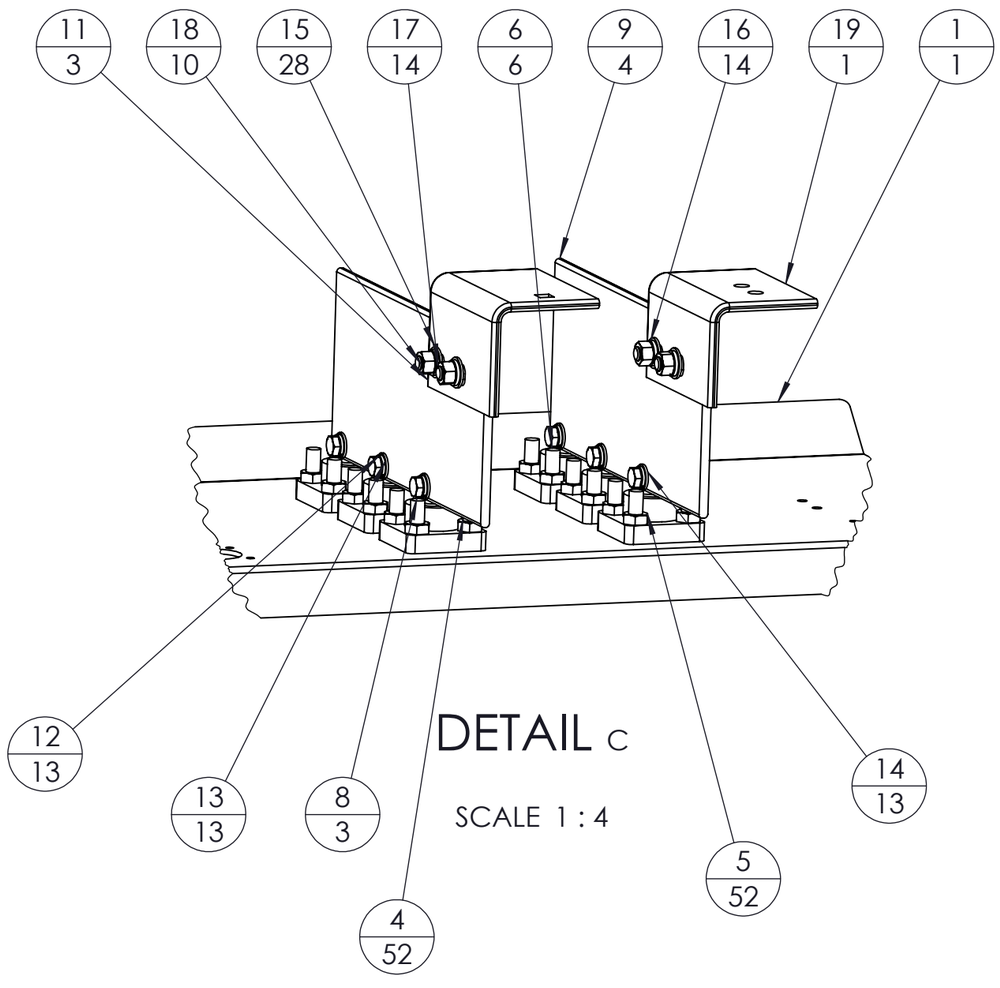

DETAIL C

SCALE 1 : 4

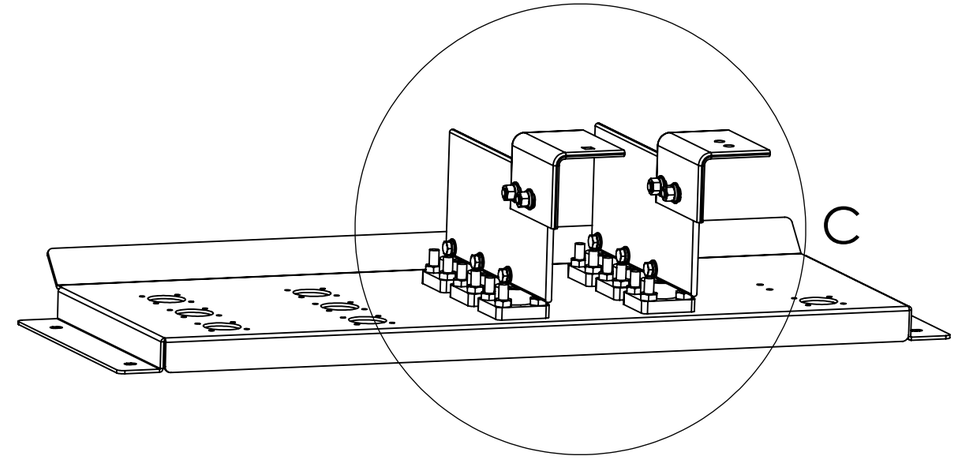

MATERIAL 17255.28 lbs	DRAWN BY LB	SAVED ON 7/22/2025	Foxfab Power Solutions — 2579-188 ST. SURREY, BC V3Z 2A1 (604) 460 - 9310 WWW.FOXFAB.COM
FINISH BARE	BD - / TOP DIE - / BOTTOM DIE -		TITLE: ASSEMBLY, CAMPLATE, NEUTRAL, 1200A FUSE ADAPTERS, 72x36 ENC
PROPRIETARY AND CONFIDENTIAL THE INFORMATION CONTAINED IN THIS DRAWING IS THE SOLE PROPERTY OF FOXFAB POWER SOLUTIONS ANY REPRODUCTION IN PART OR AS A WHOLE WITHOUT THE WRITTEN PERMISSION OF FOXFAB POWER SOLUTIONS IS PROHIBITED.	UNLESS OTHERWISE SPECIFIED: DIMENSIONS ARE IN INCHES TOLERANCES: X ± .25, X.X ± .1, X.XX ± .05, X.XXX ± .025, ANGULAR ± 1 INTERPRET DIM AND TOL. PER: **ASME Y14.5**		THIRD ANGLE: SIZE **B** SCALE 1:5 REV A
			ITEM NO. DWG. NO. 100-90005 SHEET 3 OF 3